WIRING DIAGRAM

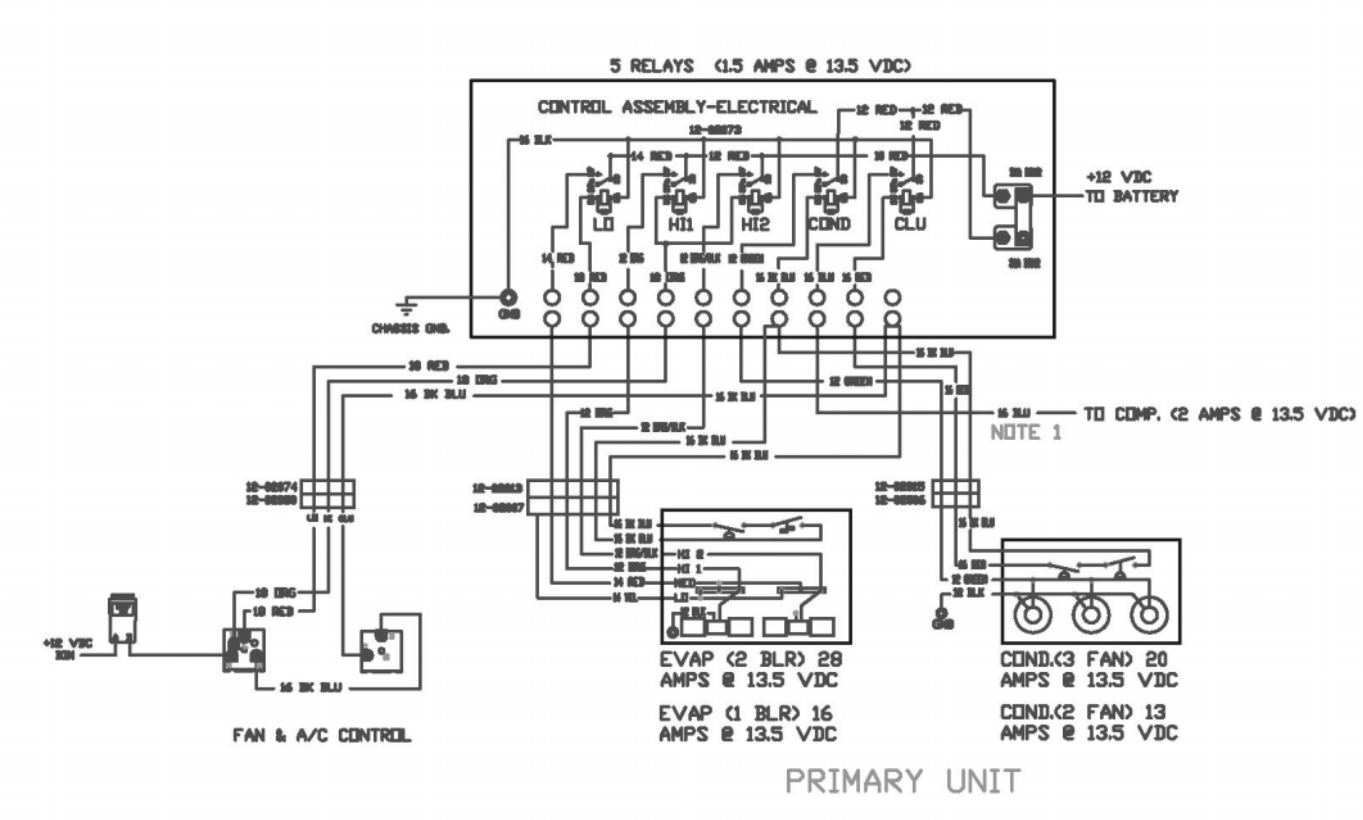

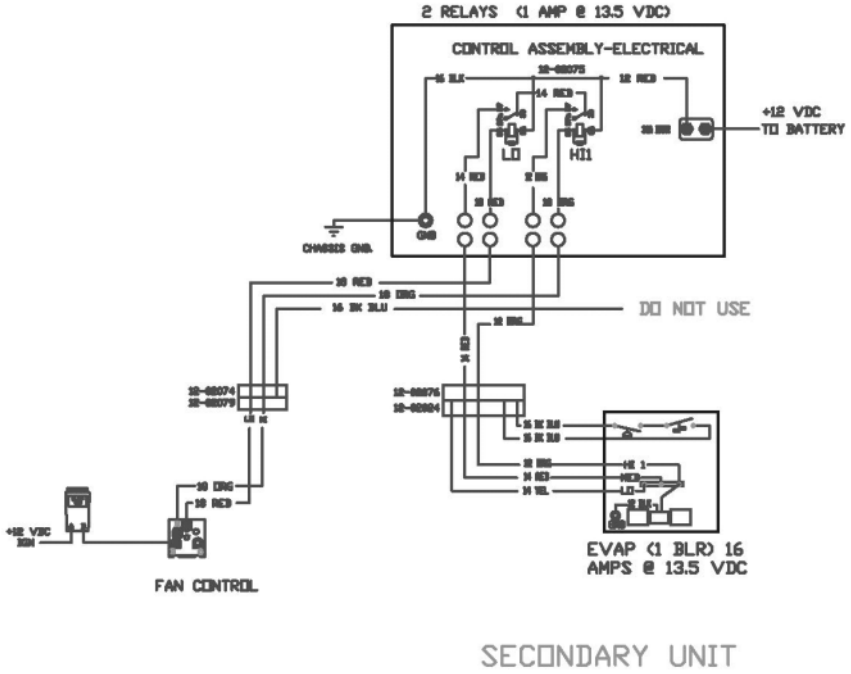

NOTES

1. Secure the 16GA blue wire to the <white> "16GA blue comp" terminal. Route to the engine compartment and connect to the compressor wire.

CAUTION! PLEASE READ

It is the responsibility of the Installer/Dealer to make sure that the alternator is of sufficient size to operate the A/C system with all other electrical components